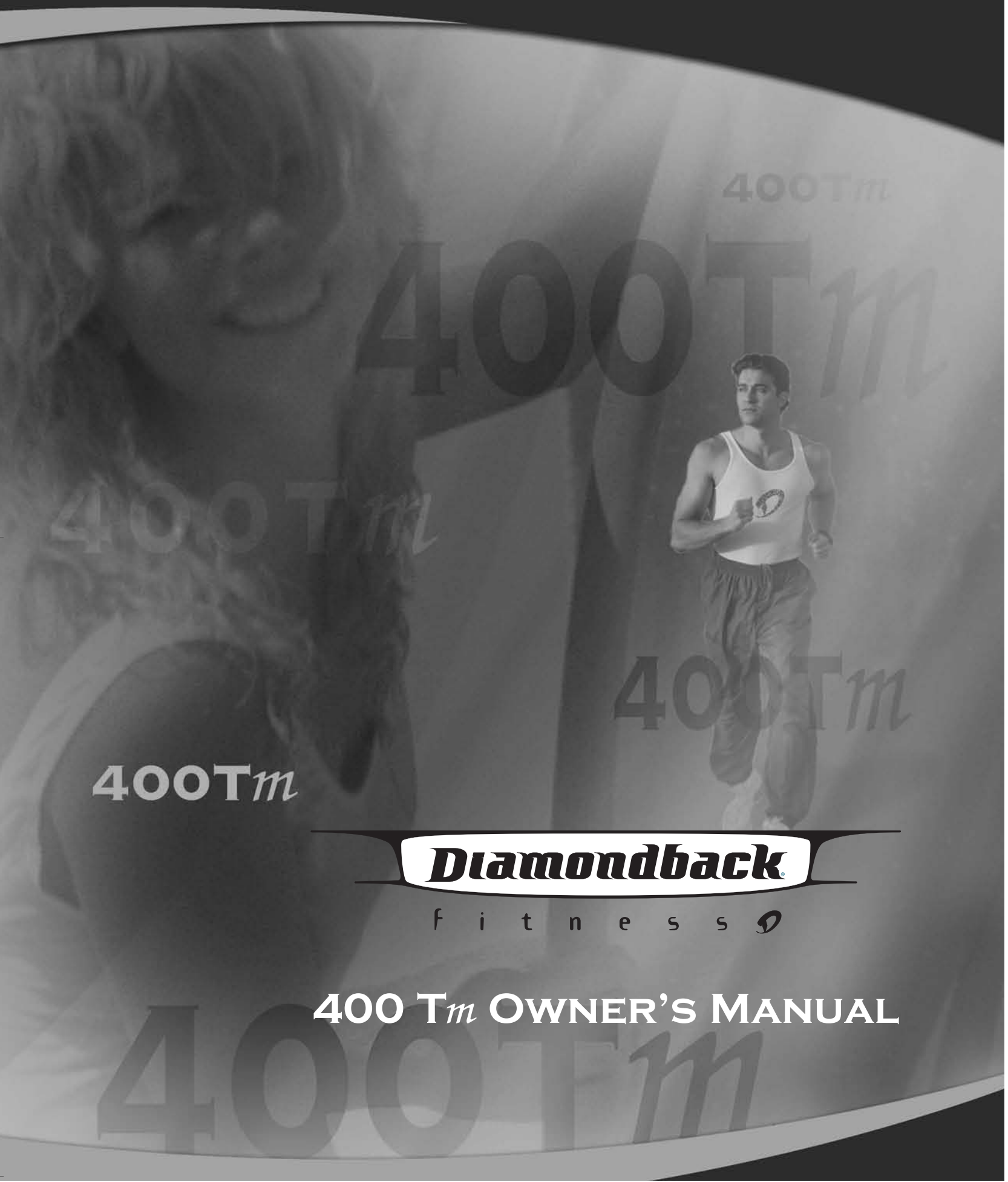

Diamondback fitness

400 Tm Owner's Manual

SERIAL NUMBER
R0608640001
SAMPLE
WARNING REMOVING OR ALTERATION
OF THIS LABEL VOIDS WARRANTY

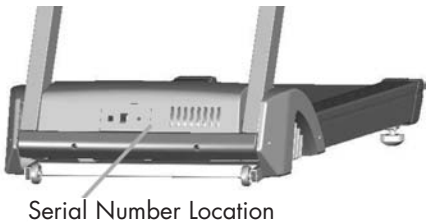

IT IS IMPERATIVE THAT YOU FILL IN THE FOLLOWING INFORMATION AND REFER TO IT SHOULD THE NEED FOR SERVICE ARISE.

Product Name: Diamondback 400Tm Treadmill

Serial Number: R _ _ _ _ _ _ _ _ _ _

To Activate Warranty:

1. **REGISTER YOUR WARRANTY AT www.diamondbackfitness.com or**
2. **COMPLETELY FILL OUT THE ATTACHED WARRANTY CARD (SEE BACK COVER) AND RETURN TO DIAMONDBACK FITNESS WITHIN 15 DAYS OF THE DATE OF PURCHASE. FAILURE TO COMPLY WITH THE WARRANTY ACTIVATION PROCEDURE MAY VOID THE MANUFACTURER WARRANTY.**

Dealer Name: _____

Dealer Address: _____

Dealer Telephone Number: ( ) _____

Dealer Contact Name: _____

Date Purchased: _____

Shipping Materials:
Diamondback recommends that you retain the original packing materials (box and packing items) for future shipping needs.

Table of Contents

Purchaser's reference information **2**

Introduction **4**

Safety Instructions and Warnings **5**

Assembly Instructions **7**

Workout Guidelines **10**

- Maximum Heart Rate & Training Zone
- Quantity and Quality

Heart Rate Monitoring Devices **13**

Console **14**

- Glossary of Terms
- Default Values
- Operating Tips
- Console Layout **16**
- Displays
- Function Keys

Workout Programs **19**

- Belt Start Sequence
- Warm Up
- Cool Down
- Workout Summary
- Quick Start
- Classic Programs
  - Manual
  - Hill Walk
  - Easy Jog

Domestic Warranty Information **27**

Maintenance **29**

Warranty Card **31**

Introduction

Congratulations on the purchase of your new 400Tm treadmill. You are about to experience one of the most effective and technically advanced methods of low impact, cardiovascular exercise available today. Your 400Tm was created by Diamondback Fitness, the innovative leader in fitness and bicycle equipment for nearly three decades.

Your 400Tm has all the latest features and design elements to make your workout extremely efficient and comfortable. Your console offers 3 display windows with easy to select programming button on one of them, plus a Polar® Compatible Heart Rate receiver. You can chose from 3 preset programs and Quick Start option. Our new treadmill is a serious cardio fitness machine that will keep you motivated, challenged and within reach of your fitness goals.

You can count on your Diamondback Treadmill to provide years of pleasure and fitness. The solid steel frame, quality construction, techno-savvy electronics and exceptional styling are guaranteed to provide you with the ultimate workout experience. Congratulations on choosing a treadmill from America's premier name in light institutional and home exercising equipment.

For more information or questions regarding your 400Tm, please go to our website at www.diamondbackfitness.com. Or please contact us:

Diamondback Fitness
300 Camarillo Ranch Road,
Camarillo, CA 93012
Ph. 1.800.776.7642
Fax: 1.805.388.5890

This treadmill is built for optimum safety and is designed to meet or exceed all domestic and international standards. However, basic precautions need to be followed when operating any exercise equipment. BE SURE TO READ THE ENTIRE OWNER'S MANUAL BEFORE OPERATING YOUR UNIT.

CAUTION – FOR SAFE OPERATION

1. Wear the safety cord and clip all times while using the treadmill.
2. Before beginning any exercise program on the treadmill, it is important to consult with your physician if you have any of the following: History of heart disease, high blood pressure, diabetes, chronic respiratory diseases, elevated cholesterol, or if you smoke cigarettes or experience any other chronic diseases or physical complaints.
3. If over the age of 35 or overweight, consult with your physician before beginning any exercise program.
4. Pregnant women should consult with their physician before beginning an exercise program.
5. If you experience dizziness, nausea, chest pains or other abnormal symptoms during exercise, stop the exercise session immediately. Consult your physician before continuing.
6. Drink fluids if you exercise for twenty or more minutes on the treadmill.
7. Always follow the console instructions for proper operation.

DANGER

To reduce the risk of electric shock, always unplug the treadmill from the electrical outlet immediately after using and before cleaning.

WARNING – TO REDUCE THE RISK OF BURNS, FIRE, ELECTRIC SHOCK, OR INJURY TO PERSONS:

1. This treadmill should never be left unattended when plugged in. Unplug from outlet when not in use, and before servicing or moving the unit.
2. Close supervision is necessary when using this treadmill around children, pets, invalids, or disabled persons. Keep children & pets away from the treadmill. Hands and feet may get caught in the moving parts which could result in serious injury.
3. Never operate your treadmill if it has a damaged cord or plug, or if it is not working properly. Contact your authorized Diamondback Fitness dealer for service and repair.
4. Keep the power cord away from heated surfaces.
5. Never insert any objects into openings. Keep hands and feet away from all moving parts.
6. This treadmill is designed for home use only.
7. Check the power requirement for your unit to see if it matches your local area power outlet.
8. Do not operate the heart rate monitor transmitter together with an electrical heart pacemaker. The transmitter may cause electrical disturbances.
9. Inspect this treadmill prior to exercising to ensure it is working properly. Always make sure all components are fastened securely.
10. This treadmill is intended for indoor use. Do not place the unit outdoors.
11. Place your treadmill on a solid, level surface when it is in use. Adjust the leveler on the treadmill if necessary.
12. Do not dismount the treadmill until it has come to a complete stop.
13. Do not operate if oxygen equipment is being utilized or if aerosol (spray) products are being

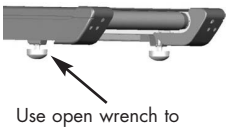

Use open wrench to adjust the leveling pad here.

used in the area.

14. Keep the treadmill away from walls to allow proper ventilation. Air should be able to circulate freely around the unit. Keep all air openings free of dirt and dust.
15. To ensure proper functioning of your treadmill, do not install attachments or accessories not provided or recommended by Diamondback.
16. Place the treadmill in an area that will meet minimum clearance requirements: Front & Sides: 1 ft / 30 cm, Back 6 ft./ 180 cm
17. Always wear proper clothing and shoes when exercising on the treadmill.
18. Do not stand on the tread belt while performing auto-calibration.
19. Never walk or jog or run backwards on the treadmill.
20. Higher speed and higher incline is not for everyone. It is designed for occasional use of a skilled runner and may exceed many users' capabilities. Stop right away if you feel any discomfort.
21. Use this treadmill only for its intended use as described in this manual. User weight is not to exceed 325 pounds / 148 kilograms.
22. Use the handrails when getting on and off your treadmill.
23. Do not remove the treadmill covers or other components. Only an authorized Diamondback Fitness dealer should perform service.

GROUNDING INSTRUCTIONS

This product must be grounded. If it should malfunction or breakdown, grounding provides a path of least resistance for electric current to reduce the risk of electric shock. The treadmill is equipped with a cord having a grounding conductor and grounding plug. The plug must be plugged into an appropriate outlet that is properly installed and grounded in accordance with all local codes and ordinances.

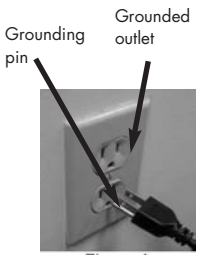

Figure
Grounding
Methods

DANGER

Improper connection of the grounding conductor can result in risk of electric shock. Check with a qualified electrician or serviceman if you are in doubt as to whether the treadmill is properly grounded. Do not modify the plug provided with this product- if it will not fit the outlet, have a proper outlet installed by a qualified electrician.

Your treadmill is for use on a 120 volt circuit and has a grounding plug that looks like the one illustrated in the picture above. Make sure the treadmill is connected to an outlet having the same configuration as the plug. Do not use an adapter with your treadmill.

Place this clip onto your clothes *before* you styart using treadmill.

SAFETY KEY CLIP & TETHER

- Your treadmill will not start unless the safety key is placed on the proper location of treadmill console.
- Attach the safety key clip properly onto your clothes before operating treadmill.
- In case of an emergency, pull the safety key off the treadmill, it will cut off the power to the console and stop the treadmill immediately.
- Place the safety key back in place, the treadmill will resume back to idle mode.
- Contact your dealer for a safety key replacement if you do not have one.

SAVE THESE INSTRUCTIONS

Please take the assembly hardware out of the hardware package box. Lay all the hardware out and take note for its locations. Follow the assembly instruction step by step to complete the assembly.

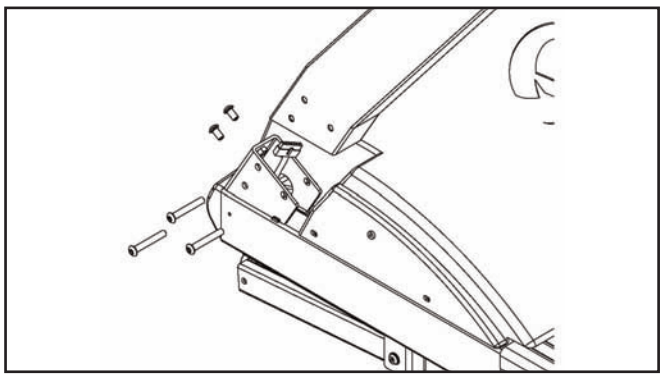

Step 1: Upright Posts Assembly

1. Straight out the main wire harness and insert it though the top of left upright post.
2. Slide the upright post onto its receptor and insert three M8 x55mm screws on the side and two M8 x 15mm screws on the front. Tighten these 5 screws with Allen wrench. Be careful not to pinch the main wire harness while tightening these screws.
3. Repeat procedure 2 for the Right upright post.
4. Make sure the screws are securely tightened.

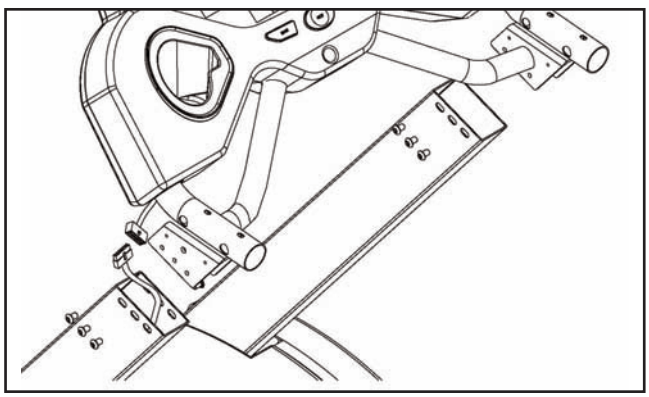

Step 2: Console Assembly

1. Hold the console next to the Left upright post and connect the main wire harness connectors together.
2. Insert the console U bracket into each side of upright post. Be careful not to pinch the wire harness while inserting the U bracket.
3. Insert three M8 x12mm screws each on inner and outer Left upright post (totally 6 screws on each upright post).
4. Tighten the 6 screws securely with Allen wrench.
5. Repeat procedure 3 & 4 for Right upright post.
6. Make sure all screws are securely tightened.

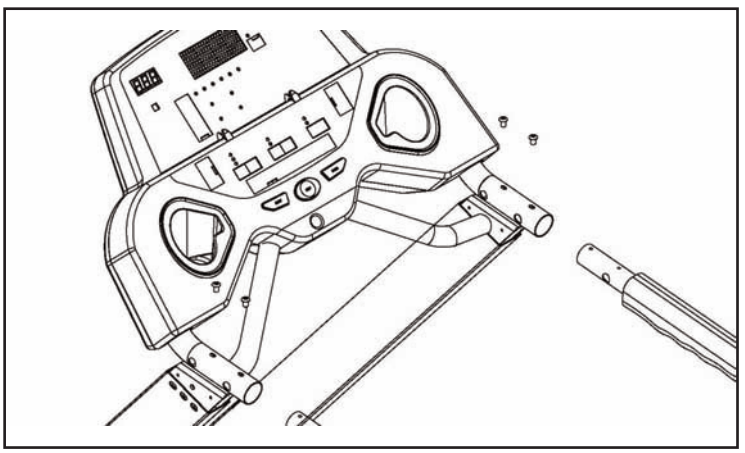

Step 3: Handrail Assembly

1. Insert Left handrail into Left handrail receptor.
2. Insert two M6 x12mm screws and tighten them with Allen wrench.
3. Repeat the procedure 1 & 2 for the Right handrail.
4. Make sure all screws are securely tightened.

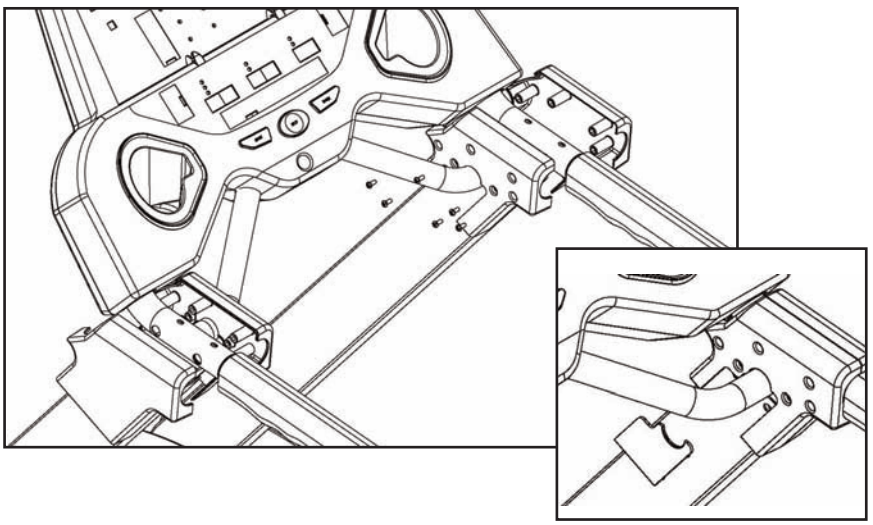

Step 4: Handrail Cover Assembly

1. Place the Left inner handrail cover into the Left handrail and tighten this cover with two M5 x12mm screws using Phillips screwdriver.
2. Now place the outer handrail cover through the handrail and into inner cover. Insert four more M5 x12mm screws. Tighten all 6 screws now.
3. Repeat procedure 1 & 2 for the Right handrail covers.
4. Place the handrail cover inserts into the inner handrail covers.

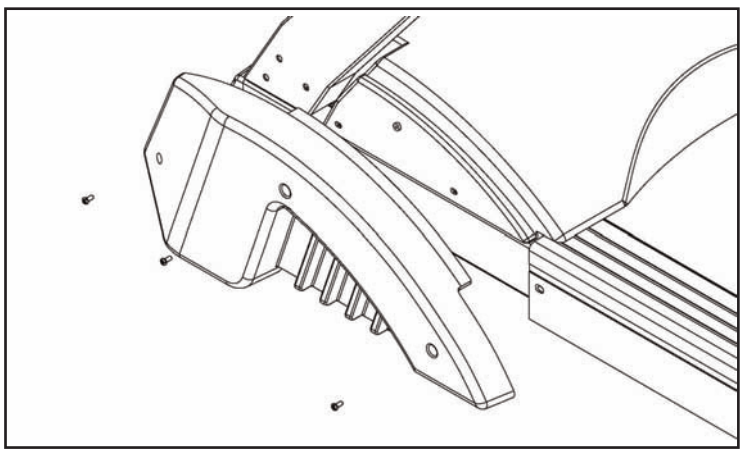

Step 5: Motor Cover Assembly

1. Place the Left motor cover onto the left side of frame.
2. Insert and tighten the self-tap M5 x 10mm screw into the center and top mounting hole using Phillips screwdriver.
3. Insert and tighten two M5 x16 on front and rear end of the cover using Phillips screwdriver.
4. Repeat procedure 1, 2 & 3 for Right motor cover.

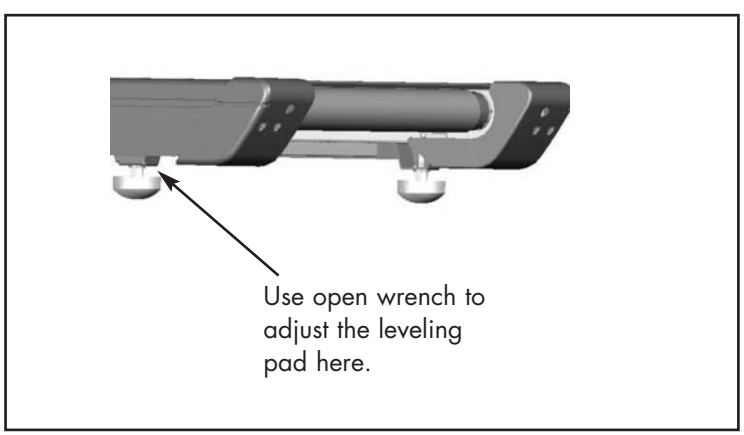

Step 6: Finish Up

1. Make sure the treadmill is leveled with the floor. Adjust it if necessary.
2. Plug your power cord in and turn ON the treadmill.
3. Make sure your safety key is in place.

Diamondback fitness

Good health is an exercise in common sense.

The Surgeon General released a new study in 2001, The Surgeon General's Call To Action To Prevent and Decrease Overweight and Obesity. It indicates that 61% of American adults are either overweight or obese. The story states that overweight increases the risk of health problems, such as heart disease, certain types of cancer, type 2 diabetes, etc. It further points out that overweight needs to be regarded primarily as a Health rather than as an Appearance issue.

The Surgeon General's Healthy weight advice for consumers is:
1. Aim for a healthy weight: Find your Body Mass Index (BMI) on the chart below.
2. Be active: Keep physically active to balance the calories you consume.
3. Eat well: Select sensible portion sizes.

BMI = (weight (lb) ÷ height^2 (in)) x 703

Weight in Pounds

Height in Feet and Inches	120	130	140	150	160	170	180	190	200	210	220	230	240	250
4'6	29	31	34	36	39	41	43	46	48	51	53	56	58	60
4'8	27	29	31	34	36	38	40	43	45	47	49	52	54	56
4'10	25	27	29	31	34	36	38	40	42	44	46	48	50	52
5'0	23	25	27	29	31	33	35	37	39	41	43	45	47	49
5'2	22	24	26	27	29	31	33	35	37	38	40	42	44	46
5'4	21	22	24	26	28	29	31	33	34	36	38	40	41	43
5'6	19	21	23	24	26	27	29	31	32	34	36	37	39	40
5'8	18	20	21	23	24	26	27	29	30	32	34	35	37	38
5'10	17	19	20	22	23	24	26	27	29	30	32	33	35	36
6'0	16	18	19	20	22	23	24	26	27	28	30	31	33	34
6'2	15	17	18	19	21	22	23	24	26	27	28	30	31	32
6'4	15	16	17	18	20	21	22	23	24	26	27	28	29	30
6'6	14	15	16	17	19	20	21	22	23	24	25	27	28	29
6'8	13	14	15	17	18	19	20	21	22	23	24	25	26	28

Healthy Weight Overweight Obese

Note: This chart is for adults (aged 20 years and older).

Heart rate is an important key to your exercise.
The Surgeon General also released a report on physical activity and health. This report definitively stated that exercise and fitness are beneficial for a person's health and redefined that exercise is a key component of disease prevention and healthier living.

Medical research has shown us that there is an amount of exercise, which is enough to condition the cardio respiratory system and the muscles of the body. This amount of exercise is between 60% and 85% of your maximum heart rate measured during a training session. This range allows enough exercise to achieve fitness, but not an excessive amount to cause injury. Your heart rate is an excellent indicator of the amount of

stress placed on the cardiovascular system. Taking full advantage of this information, this treadmill is designed to include heart rate monitoring features.

If exercise intensity is too low or too high, no gains will be made in fitness. If the intensity is too low, the stress levels are ineffective. If the intensity is too high, injury or fatigue may set your exercise program back as you try to recover.

The best way to monitor exercise intensity is to accurately count your pulse during exercise. Your heart rate can easily be determined by counting your pulse at the chest, wrist or at the carotid artery on your neck. It is difficult to count your own pulse during exercise, mainly because you cannot count fast enough to get an accurate number. This treadmill is equipped with a wireless telemetry receiving system. What it does is automatically count your heart rate while you are wearing a heart rate chest belt during your exercising period. Heart rate is monitored and electronically displayed as a digital readout. Your target heart rate, the intensity needed to improve cardiovascular fitness, depends primarily on your age and not your state of fitness. It is calculated as a percentage of your maximum heart rate, estimated as 220 minus your age. It is most effective to train at your target heart rate between 60% and 85% of your maximum heart rate. In order to get the most accurate reading, it is recommended to enter your age before your workout.

.

Maximum Heart Rate & Training Zone

To calculate your maximum heart rate and find your training zone, use the following formula. An example has been provided below based for a 35-year –old person:

220 – Age = Maximum Heart Rate	(220 – 35 = 185)
60% of Maximum Heart Rate	(60% x 185 = 111bpm)
85% of Maximum Heart Rate	(85% x 185 = 157bpm)
Training Zone:	111bpm – 157bpm

Quantity & Quality

It is recommended that you accumulate at least 30 minutes of physical activity most days of the week. Physical activity should be initiated slowly and the intensity should be increased gradually. You should select activities that you enjoy and can fit into your daily life. Having Diamondback equipment at home certainly gives you the comfortable and convenient workout you want.

The American College of Sports Medicine makes the following recommendations for the quantity and quality of training for developing and maintaining cardio respiratory fitness in healthy adults:

- An activity that uses large muscle groups, maintained continuously, and is rhythmical and aerobic in nature.
- Duration: 20 to 60 minutes of continuous aerobic activity, including a warm-up and cool-down period for each exercise session.
- Frequency: 3 to 5 times per week.
- Intensity: 60% to 85% of maximum heart rate.
- In addition to aerobic exercise, it is recommended that you add strength training of moderate intensity twice per week to your program.

Heart Rate Guidelines
60% - 85% Maximum Target

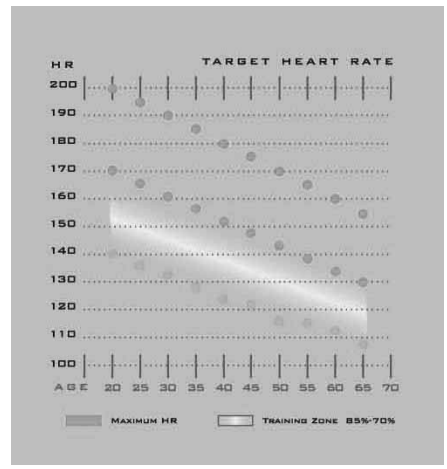

Typical Target Zone Exercise Patterns for 35 year-old

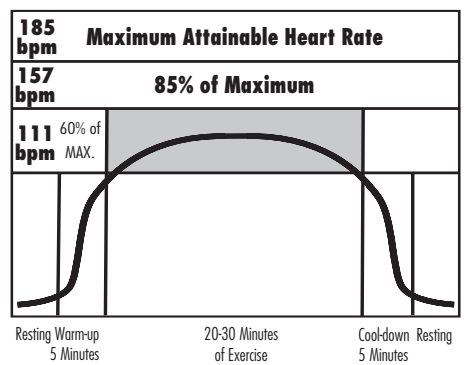

Get a smart start on exercising.
Anyone over the age of 35, as well as younger persons whom are overweight, should check with his/her physician before beginning any type of exercise program. People who have diabetes or high blood pressure, a family history of heart disease, high cholesterol or have lead a sedentary lifestyle should protect themselves with a medical check-up and a stress test, preferably administered during exercise by a health-care professional.

1. Always stretch before your workout to loosen muscles, and afterwards to cool down.
2. The first few minutes of your workout should be devoted to warming up muscles before a vigorous workout, and building your heart rate slowly.
3. After your aerobic workout of about 24-32 minutes, spend 10 minutes gradually reducing your heart rate with a lower resistance level.

Remember, to start slow, with intensity low, until you build endurance and strength. And always consult your physician before beginning any exercise program.

Built in Wireless Heart Rate Receiver
Note: Chest strap transmitter does not come with this unit; contact your dealer for purchase.

This treadmill is equipped with a built-in receiver for your heart rate monitoring. To get an accurate reading using these devices, you will need to be within three feet of the console, and a minimum of four feet from others using a heart rate monitoring device.

(Note: The transmitter may fluctuate erratically if you are too close to other heart rate monitoring equipment or there is other electronics near by, such as TV, Radio...)

The receiver of the wireless ECG system is built into the console unit of this treadmill. While using heart rate control modes, the computer monitors the exact measurement of your pulse. Heart rate frequency is displayed while the computer continually compares heart rate to the preprogrammed personal data. The computer adjusts the wattage to maintain heart rate at the preprogrammed level.

How to Wear Your Sensor/ Transmitter (Chest Strap)

1. Buckle one end of the chest strap onto the transmitter.
2. Adjust the band length so that the fit is snug, but not too tight.
3. Buckle the other end of the chest strap onto the transmitter.
4. Center the transmitter on your chest below the pectoral muscle (breasts).
5. Stretch the transmitter away from your chest and moisten the conductive electrode strips located next to the buckles with water.

(Note: The transmitter is on automatically when being worn. It is off when it is not connected to your body. However, as moisture may activate the transmitter, thoroughly dry the transmitter to prolong battery life.)

Erratic Heart Rate Readings:

Erratic readings on the receiver can be caused by electromagnetic disturbances. If the heart rate readings appear to be abnormal, check that your product is not within range of other strong electromagnetic signals. Common sources are televisions, computers, cars, cell phones, TV antennas and high voltage power lines (both above and below ground). Please note: Static electricity in clothing or a flapping shirt can cause electrical interference, so some items of clothing, i.e. man-made fibers, can also be the cause. Please try wetting the t-shirt in the area where the transmitter is.

If the battery of the transmitter is running low, the transmission range decreases and may cause errors similar to the ones listed above in this document.

Diamondback fitness

Glossary of Terms

- Idle mode = Console is reset and waiting for an entry. The display will turn into a clock and display current time if you have set up in the beginning. Please see clock set up section for details. If no key input for 30 minutes, the console will enter sleep mode and the display will be shut off.
- Sleep mode = no key input during idle mode, the console display will be off. You can press any key to wake up the console and return to idle mode.
- LED = The lights on the face of the console.
- Watts = The rate of energy currently being expended.
- Work = The amount of energy expended during exercise.

Default Values

- Age = 35 years
- Weight = 155 lb or 70kg for Metric system
- Program Time = 30 minutes
- Max program time = 4 hours. When continues workout time reaches 4 hours, the treadmill will enter cool down mode.
- Speed default for Warm up and Cool down is 2.0mph.
- Incline default for Warm up and Cool down is 0%.

Note: Every time age or weight is changed, the default value setting will be updated to the last modification.

Operating Tips

- Power ON/OFF: Power ON/OFF switch is located in the front of the motor cover. Turn Power ON before use the treadmill and turn it OFF when not using treadmill.
  - In the power save mode, press any key to wake up the console and start operation.
  - Turn power off will reset the clock back to default and display 12:00.

- Program start sequence
  - Program selecting mode - Press program selecting key to select a program, press "ENTER" to accept.
  - Program setting mode – console will prompt program setting for your adjustment, press UP/DOWN key to adjust the setting and ENTER to confirm.
  - Warm up mode – as soon as START key is pressed, Warm up mode will start, except Quick Start & Manual programs.
  - Program run mode – after warm up mode, the program run mode will start. The program time starts counting and workout data starts accumulating.
  - Cool down mode - when program time is up, program will end and Cool down mode will begin.
  - Workout summary mode – after completing cool down mode, console will display your workout summary for your review.

- Reset: To reset a program during its operation, press and hold the "STOP" key for 2 seconds. When the program resets, the console returns to idle mode.
- Pause a program: You may interrupt or pause a program for up to 30 minutes during a workout before the console resets. To pause a

program, simply press "STOP" key once.

- o The data window will display "PAUSE" during pause mode
- o The incline will stay where it is at; speed will return to 0mph.
- o Press "STOP" key one more time during Pause mode, the program will end and enter workout summary mode.
- o If no key is pressed after 30 minutes in Pause mode, the console will reset and return to idle mode.

- Resume a program : To resume a program back to the point of where you left off, press "START" key during pause mode.

- Re-start a program: The user may re-start a program after the program ends. Simply press "START" key during Cool Down or Workout Summary mode. The program will be started immediately without Warm up. The program default will remain the same as previous program; the calories and distance will continue accumulating.

- Speed adjustment: When speed adjustment is allowed by a program, you may adjust the speed from 0 mph to 10 mph by pressing SPEED UP/DOWN key.

- Incline adjustment: When incline adjustment is allowed by a program, you may adjust the incline from 0% to 10% by pressing INCLINE UP/DOWN key.

- English / Metric setting: The default Units is English system. To enter the system-switching mode, press & hold "SPEED UP" & "SPEED DOWN" keys at the same time for 2 seconds during idle mode. The Data display will show "1" for English units or "2" for Metric units. To change it, press"UP/DOWN" key to switch the current Units. Press "ENTER" key to accept the setting and enter idle mode.

- Beep Sound setting: you have the option to turn the beeper on or off. To enter the beeper setting mode, press & hold "INCLINE UP" & "INCLINE DOWN" keys at the same time for 2 seconds during idle mode. The Data display will show "ON" or "OFF" to indicate current the beeper setting. Press "UP/DOWN" key to switch the setting. Press "ENTER" key to accept the setting and enter idle mode.

Diamondback
fitness

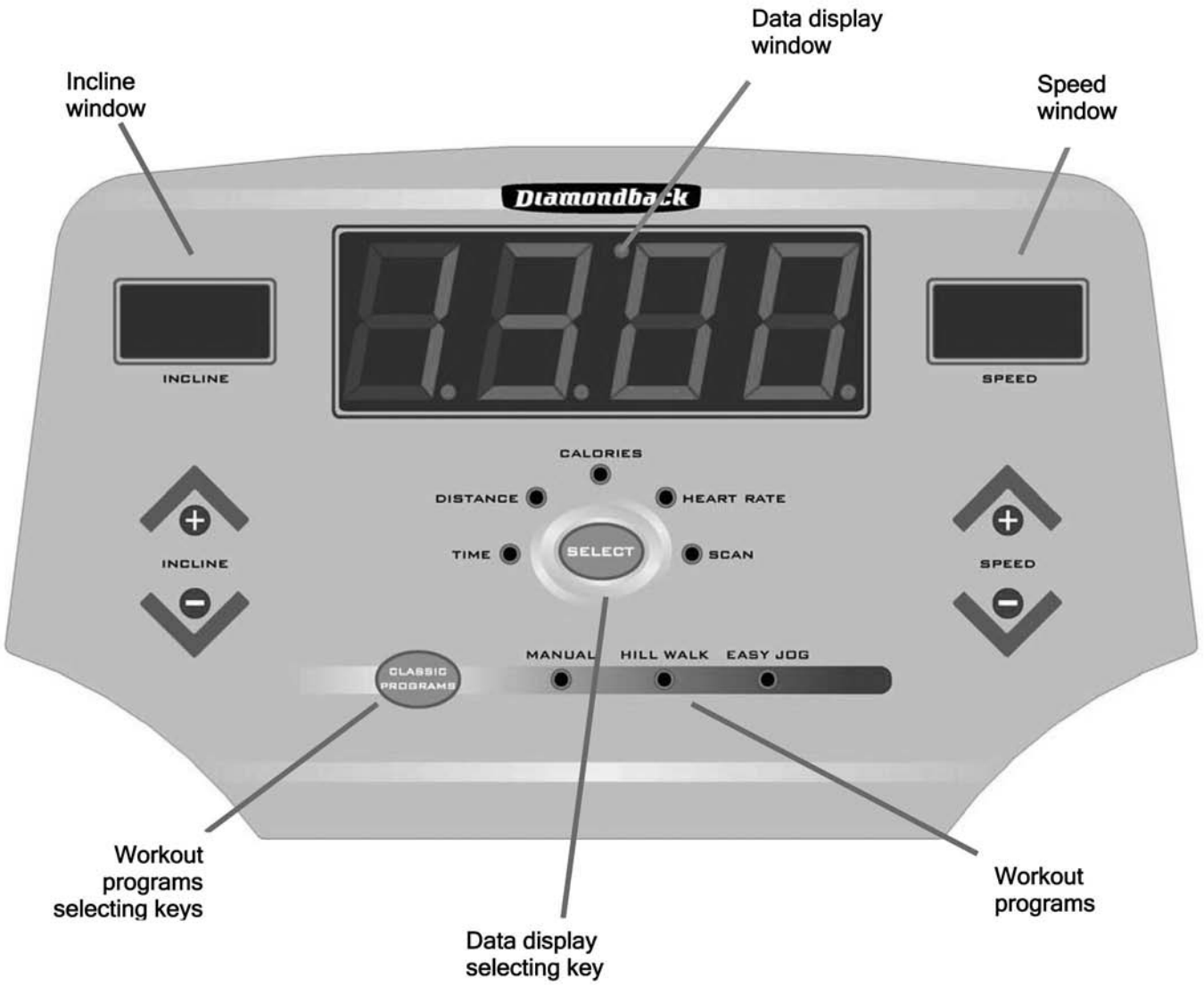
Data display window
Incline window
Speed window
Diamondback
INCLINE
SPEED
CALORIES
DISTANCE
HEART RATE
TIME
SELECT
SCAN
INCLINE
SPEED
CLASSIC PROGRAMS
MANUAL
HILL WALK
EASY JOG
Workout programs selecting keys
Data display selecting key
Workout programs

Displays:

- Clock Set Up:
  The Data display acts as a clock during idle mode. Please run below procedures for initial or after power off to set up the clock function. Without going thru clock setting procedure, the display will stay showing "12:00" and clock function will not be activated.
  - o The initial Data display shows the default display of "12:00" when you first turn on the power.
  - o Press data display "SELECT" button once during idle mode will enter clock setting mode. And "12" will be blinking, press UP/DOWN key to adjust the hour setting from 0-12. Press "DOWN" key to adjust from 12:00 down if the current time is AM; and press "UP" key to adjust from 12:00 up if the current time is PM.Press "ENTER" to confirm.
  - o After ENTER pressed, "00" will be blinking and wait for an entry. Press UP/DOWN key to adjust the minute setting.
  - o Press ENTER to confirm the minute setting and start the clock function.

A. Workout data display

a. Speed and Incline display

- Speed (mph) — Current speed.
- Incline (%) — current incline %

b. Data display

As soon as a program is started, it will start displaying the default workout data: time. You may select your favorite data displays by pressing the "SELECT" button, the LED indicator will light up to show which data is displaying.

- Time (hr: min or min: sec): The remaining of program time.
- Distance (mile or km): Total workout distance.
- Calories (kcal): Total workout calories.
- Heart rate (bpm): Your current heart rate. If there is no pulse detected, it will display " - - - " instead.
- Scan: if Scan function is selected, the display will show above data for 5 seconds each.

Function keys:

a. Speed UP/DOWN keys:
   - o During program setup, press Speed "UP/DOWN" key to adjust the following — age, weight & time setting.
   - o After program started, press Speed "UP/DOWN" key to adjust the speed.
   - o Speed increment = 0.1mph.

b. Incline Up/Down keys:
   - o During program setup, press incline "UP/DOWN" key to adjust the following — age, weight & time setting.
   - o After program started, press Incline "UP/DOWN" key to adjust the incline.
   - o Incline increment = 0.5%.

Speed & Incline Display

Data Display

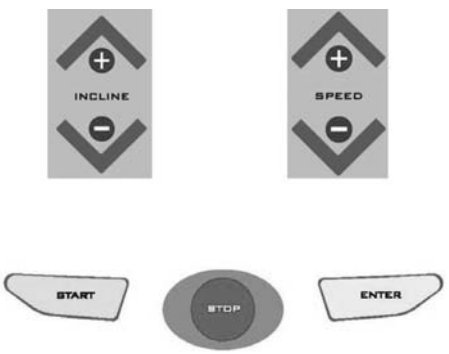

Function Keys

Emergency Key

Function keys:

c. Enter key:
- After program selecting, press "ENTER" to accept the program and enter its setup mode.
- After age, weight, time.. adjustment, press "ENTER" key to accept your entry.

d. Start key:
- Press "START" to start a program during program setup.
- Press "START" key to skip Warm up and enter program executing.
- Press "START" to re-start a program during Cool Down, workout summary mode.
- Press "START" to resume a program from pause mode.

e. Stop key:
- Press and hold "STOP" button for 2 seconds to reset the console.
- Press "STOP" to pause program run mode.
- Press "STOP" to enter workout summary during Cool Down.

f. Emergency key
- Place the emergency clip onto your clothes properly before using treadmill.
- Treadmill will not start unless the emergency key is properly engaged.
- Pull the emergency off the treadmill will result power shut off and stop the treadmill immediately.
- When the emergency key is disengaged, the data display will show "SAFE" for indication.
- Pull the emergency key off the treadmill if you feel ill after using treadmill or any other emergency occurs.

BELT START SEQUENCE

Belt start sequence is designed with your safety in mind. It is an indication to let you know that the treadmill motor is about to start and be prepared.

Anytime, treadmill is ready to starts from 0mph, the belt start sequence will appear as below:

- Data display will display " 3, 2, 1"
- As soon as "1" appears, the belt will starts at 0.5mph and increasing to appropriate setting and program timer will begin.

WARM UP

Getting Started
This treadmill automatically initiates a 3-minute Warm Up at the beginning of each program. It is designed to prepare your body for an intensive workout and to reduce the possibility of injury during workout.

Note: Warm Up is skipped for the Quick Start or Manual programs. Warm Up is skipped if it is a re-start program or switching from another program.

Beginning the Program
Warm Up is active as soon as the "START" key is pressed and a program is executed.

During the Program

Data Display
- Once it is started, the data display will display default Time display of "3:00" and count down. All data will start accumulating. Press "SELECT" button to switch the data displays.
- The time will display count down from 3:00.
- Speed display will show default speed of 2.0 mph.
- Incline display will show default incline of 0%.

Adjustment
- Speed = 2.0mph. Press Speed "UP/DOWN" key to adjust the speed from 0.5 — 3.5mph only.
- Incline = 0%. Press Incline "UP/DOWN" key to adjust the incline from 0 — 10%.
- "START" key can be pressed to skip the warm up and start the program immediately.

Ending the Program

- When 3-minute duration is up or Start key is pressed, Warm Up will end and the program will execute.
- There will be a beep sound to indicate the Warm up is over and the selected program begins.

Pause, Reset or Re-start a program
See Console Operating Tips section for details.

C O O L D O W N

Getting Started
This treadmill is equipped with a 3-minute Cool Down at the end of each program. It appears as soon as a program ends. Cool Down is designed to reduce muscle stiffness and allow your heart rate to recover.

Note: Cool Down is skipped for the Quick Start program.

Beginning the Program
Cool Down is active as soon as a program ends.

During the Program

Data Display
- Once it is started, the data display will display default Time display of "3:00" and count down. All data will continue accumulating. Press "SELECT" button to switch the data displays.
- The time will display "3:00" and start continuing down.
- Speed display will show default speed of 2.0 mph.
- Incline display will show default incline of 0%.

Adjustment
- Speed = 2.0mph. Press Speed "UP/DOWN" key to adjust the speed from 0.5 — 3.5mph only.
- Incline = 0%. Press Incline "UP/DOWN" key to adjust the incline from 0 — 10%.
- "START" key could be pressed to re-start the previous program again.
- "STOP" key could be pressed to skip the cool down mode and active the Workout Summary immediately.

Ending the Program
- When 3-minute duration is up or Stop key is pressed, Cool Down will end and enter Workout Summary. See Workout summary for details.

Pause, Reset or Re-start a program
See Console Operating Tips section for details.

W O R K O U T S U M M A R Y

Getting Started
For your convenience, this treadmill incorporates a Workout Summary right after the completion of the Cool Down. It will display the total workout data for 30 seconds before the Console resets.

Beginning the Program
Workout Summary appears as soon as the Cool Down mode ends or a "STOP" key is pressed during Cool Down mode. The data display will stop counting and show the

final data.

During the Program

Data Display

- Once this summary is started, the data window will default to Scan mode and display each data for 5 seconds.
  - o Time display shows total Program time.
  - o Distance display shows the total distance.
  - o Calories display shows total calories accumulated for the workout.
  - o The Heart Rate display shows average HR; if there is no HR, it will display "- - -".
  - o The Incline Display shows the average incline
  - o The Speed Display shows the average speed

Adjustment

- Incline setting will be the last setting; speed setting will be 0mph. Incline and speed can not be adjusted during workout summary mode.
- Press "START" key to re-start this program.
- Press "STOP" key to end workout summary and enter idle mode.

Ending the Program

- When 30-second duration is up, Workout Summary will end and console will reset.

Pause, Reset or Re-start a program
See Console Operating Tips section for details.

Q U I C K S T A R T

Getting Started
A Quick Start program is for someone who wants to bypass the setup mode and start their workouts right away. By picking Quick Start program, you are accepting the default values for calculations. Be sure to include a Warm Up period during your workout since the Warm Up mode is skipped in the Quick Start program.

Quick Start Key

Beginning the Program
To begin this program, simply press "START" key once during idle mode.

Program Default Values

- Max program time = 4 hours
- Default Speed = 0.5mph
- Default Incline = 0%

During the Program

Data Display

- As soon as the "START" button is pressed during idle mode, this program will begin; the data display window will display the default workout data of "time". Press "SELECT" button to switch the data displays.
- Time display will show 00:00 and count up.

- Speed display will show default speed of 0.5 mph.
- Incline display will show default incline of 0%.

Adjustment
- Press Speed "UP/DOWN" key to adjust the speed from 0 — 11mph. The speed display will update the current & future speed accordingly.
- Press Incline "UP/DOWN" key to adjust the incline from 0 -10%. The incline display will update the current & future incline accordingly.

Ending the Program
- When the max program time achieves, or "STOP" key has been pressed twice during Quick Start, this program will end and enter workout summary mode. See workout summary mode for details.
- There will be a beep sound to indicate the program ended.

Pause, Reset or Re-start a program
See Console Operating Tips section for details.

C L A S S I C P R O G R A M S

MANUAL PROGRAM

Getting Started
You could build your own profile with Manual program. Be sure to include a Warm Up period during your workout since the Warm Up mode is skipped in the Manual program.

Beginning the Program
To begin this program, press "Classic Programs" key during idle mode until "Manual" program LED indicator lights up

Accepting Default values or Entering the program setting mode
When the Manual program LED lights up, it indicates you are about to select the Manual program:
- Press "START" key to accept current default values and begin Manual program workout.
  - Default Time = 30 minutes
  - Default Speed = 0.5mph.
  - Default Incline = 0%.

- Or press "ENTER" to enter program setup mode. All three data windows will light up with default values. Please follow below steps to set up your personal data.

Classic Programs

Entering Age (Incline display)
1. The Incline window will flash "35" or last entered value and wait for your entry.
2. You may press "UP/DOWN" key to adjust the age.
3. After age adjustment, press "ENTER" to accept and enter Weight adjustment.

Entering Weight (Speed display)
1. If Enter key is pressed after age adjustment, the Speed display will flash "155"

or last entered value and wait for your entry.
2. You may press "UP/DOWN" key to adjust the weight.
3. After weight adjustment, press "ENTER" to accept and enter Time adjustment.

Entering Time (Data display)
1. If Enter key is pressed after weight adjustment, the Data window will flash "30:00" and wait for your entry.
2. You may press "UP/DOWN" key to adjust the time up to 4:00 (hr: min).
3. After time adjustment, press "ENTER" or "START" to accept and begin this program.

(*Note: you may press START key anytime to skip the setup and begin the workout immediately.)*

During the Program
As soon as the "ENTER" or "START" key is pressed, the Manual program will start.

Data Display
- Once the program is started, this program will begin; the data display window will display the default workout data of "time". Press "Select" button to switch the data displays.
- Time display will show the selected program time and count down.
- Speed display will show default speed of 0.5 mph.
- Incline display will show default incline of 0%.

Adjustment
- Press Speed "UP/DOWN" key to adjust the speed from 0 — 10mph. The speed display will update the current & future speed accordingly.
- Press Incline "UP/DOWN" key to adjust the incline from 0 -10%. The incline display will update the current & future incline accordingly.

Ending the Program
- When selected program time is up, this program will end and Cool down will be active. See Cool down section for details.
- If STOP key is pressed twice during program run mode, the program run mode will end and enter workout summary mode.
- There will be a beep sound to indicate the program ended.

Pause, Reset or Re-start a program
See Console Operating Tips section for details.

HILL WALK

Getting Started
The Hill Walk program simulates a hill climb exercise with a preset hill profile and slow speed to walk. This preset exercise profile will take you through the up hill climb and down hill glide.

Beginning the Program
To begin this program, press "Classic Programs" key during idle mode until "Hill Walk" program LED indicator lights up.

Accepting Default values or Entering the program setting mode
When Hill Walk LED lights up, it indicates you are about to select the Hill Walk program:

- Press "START" key to accept current default values and begin Hill Walk program workout.

  - Default Time = 30 minutes
  - Default segment time: this program is preset with 15 segments. Each segment time = XX (program time) /15 or 1 minute if the selected program time is less than 15 minutes.
  - Default speed = 3.0mph
  - Default incline:

Segment	1	2	3	4	5	6	7	8	9	10	11	12	13	14	15
Incline	0.0	1.0	2.0	2.5	0.5	2.0	4.0	2.5	2.0	1.0	2.5	4.0	2.0	1.0	0.0

- Or press "ENTER" to enter program setup mode. All three data windows will light up with default values. Please follow below steps to set up your personal data. (same as Manual program setup)
  - Enter Age
  - Enter Weight
  - Enter Time

During the Program
As soon as the "ENTER" or "START" key is pressed, the Warm Up will be active. See Warm Up mode section for details.

Data Display
- When Warm Up mode is completed, this program will begin; the data display window will display the default workout data of "time". Press "Select" button to switch the data displays.
- Time display will show the selected program time and count down.
- Speed display will start with speed of 3.0 mph.
- Incline display will start with incline of 0%.

.

Adjustment
- Press Speed "UP/DOWN" key to adjust the speed anytime during the program.
- Press Incline "UP/DOWN" key to adjust the incline anytime during the program. The incline of current segment will be updated to the new setting.

Ending the Program
- When selected program time is up, this program will end and Cool down will be active. See Cool down section for details.
- If STOP key is pressed twice during program run mode, the program run mode will end and enter workout summary mode.
- There will be a beep sound to indicate the program ended.

Pause, Reset or Re-start a program
See Console Operating Tips section for details.

EASY JOG

Getting Started
The Easy Jog program is designed for a beginner who just starts jogging training. It is completed with very speed settings throughout the program to help you getting started with jogging exercise. You can gradually increase the speed or incline over time when you are getting better and better.

Beginning the Program
To begin this program, press "Classic Programs" key during idle mode until "Easy Jog" program LED indicator lights up.

Accepting Default values or Entering the program setting mode
When the Easy Jog LED lights up, it indicates you are about to select the Easy Jog program:

- Press "START" key to accept current default values and begin Easy Jog program workout.
  - Default Time = 30 minutes
  - Default segment time: this program is preset with 15 segments. Each segment time = XX (program time) /15 or 1 minute if the program time is less than 15 minutes.
  - Default incline = 0%
  - Default speed:

Segment	1	2	3	4	5	6	7	8	9	10	11	12	13	14	15
Speed	4.0	4.0	4.3	4.6	4.2	4.8	5.0	4.4	4.2	4.5	4.0	4.0	4.5	4.5	4.0

- Or press “ENTER” to enter program setup mode. All three data windows will light up with default values. Please follow below steps to set up your personal data. (same as Manual program setup)
  - Enter Age
  - Enter Weight
  - Enter Time

During the Program
As soon as the "ENTER" or "START" key is pressed, the Warm Up will be active. See Warm Up mode section for details.

Data Display
- When Warm Up mode is completed, this program will begin; the data display window will display the default workout data of "time". Press "Select" button to switch the data displays.
- Time display will show the selected program time and count down.
- Speed display will start with speed of 4.0 mph.
- Incline display will start with incline of 0%.

.

Adjustment
- Press Speed "UP/DOWN" key to adjust the speed anytime during the program. The speed of the current segment will be updated to the new setting.
- Press Incline "UP/DOWN" key to adjust the incline anytime during the

program.

Ending the Program

- When selected program time is up, this program will end and Cool down will be active. See Cool down section for details.
- If STOP key is pressed twice during program run mode, the program run mode will end and enter workout summary mode.
- There will be a beep sound to indicate the program ended.

Pause, Reset or Re-start a program
See Console Operating Tips section for details.

(Applies to all product sold and placed within the continental US, Alaska, Hawaii, and Puerto Rico only)

Effective: August 2007
Diamondback warrants its treadmill to be free from defects in material and workmanship under normal use in the home environments. Diamondback's obligation under this Warranty is limited to repair or replacement of any defective part without charge through an authorized service agent to the original purchaser with the following parameters:

Who is covered:
The Warranty is extended to the individual or legal entity whose name appears on the Warranty registration card filed with Diamondback and may not be transferred to any other individual or legal entity.

To obtain service:
To obtain service you must contact your authorized Diamondback Fitness dealer. Your dealer is also your authorized service agent. An authorized service agent must diagnose your unit in order to determine Warranty claims/issues.

Sales where the unit is delivered unassembled (in a carton) to the end user (e.g. mail order or Internet sales) without a service contract purchased through the dealer voids the Warranty.

Warranty Registration:
Warranty commitments are valid only with a completed Warranty card that is returned within 15 days from the date of purchase and includes the product serial number. Registration is available at www.diamondbackfitness.com.

Proof of purchase from Diamondback's authorized dealer will be required if the Warranty card is not registered prior to any consideration of Warranty claim.

WHAT IS COVERED

Home:

Frame:	Lifetime limited Warranty, covers defects in welds, materials, and workmanship.
Drive Motor:	Lifetime limited warranty
Parts & Electronics:	5 years
Normal Wear Items:	90-day limited on foam grips, etc.

Warranty voided if:
The Warranty does not apply to any failure of the product, or any parts of the product, due to: assembly errors, alterations, modifications, misuse, abuse, accident, improper maintenance, or if the serial number on the product has been removed, altered or defaced. Assembly errors include but are not limited to:

Damaged wire harness.
Bolts used in the wrong location.

Parts & Service:
Contact the authorized Diamondback dealer where unit as originally purchased. If you have moved, or that retailer is unavailable, use our dealer locator at www.diamondbackfitness.com to help find another authorized dealer.

Diamondback is not responsible for arranging Warranty service and/or honoring extended warranties provided by dealers.

Exclusions:
Warranty is void if the treadmill is placed in a commercial or light commercial environment, such as health club, school, or correctional facility.

Additional Rights:
This Warranty is expressly in lieu of all other warranties, and any implied warranties of merchantability or fitness for a particular purpose created hereby, are limited to the same duration as the express Warranty herein. Diamondback Fitness, Inc. shall not be liable for any incidental or consequential damages. Some states do not allow the exclusion or limitations of implied warranties, incidental or consequential, so the above limitations and exclusions may not apply to you.

Retailers and wholesale outlets for Diamondback Fitness, Inc. products are not authorized to modify this Warranty in any way.

This Warranty gives the original owner specific legal rights. Other additional rights may vary from state to state.

Diamondback Fitness, Inc
300 Camarillo Ranch Road
Camarillo, CA 93012

800-776-7642

CAUTION – FOR SAFE OPERATION

Always inspect hardware prior to any exercise session. Turn power switch to the "OFF" position and unplug electrical cord from the outlet before attempting maintenance. Inspect unit for loose parts and frayed wires. Repair or replace any damaged or worn parts, tighten all loose hardware as necessary.

After training, always wipe down your treadmill. Perspiration that continuously settles on frame, pads or casing may eventually cause rust or damage to the unit. Damage resulting from lack of proper maintenance will not be covered under warranty.

A proper maintenance will extend the life and ensure a better performance of the treadmill. Below you will find our recommendations for the maintenance of your treadmill:

Overall Cleaning

Use a damp cloth to clean outer surface and console of the treadmill. DO NOT USE PETROLEUM BASED PRODUCTS TO CLEAN ANY PART OF THE TREADMILL. Use a clean, lint free, cloth to occasionally clean the deck surface.

Belt/Deck Maintenance

Lubrication to the deck is very important to your treadmill. It will reduce the wear of the deck and maintain the smooth running surface. Although this treadmill has been pre-lubed at the factory but periodic lubrication is still necessary. It is difficult to predict exactly when the belt will need lubrication, one of the most common symptoms is a hesitation or pause of the belt when you set your foot. Here are some of the tips for deck lubrication:

- Wipe entire deck surface with a clean, lint free cloth.
- Lubricate deck with the Diamondback Lubrication Kit (which can be purchased through your Diamondback Dealer.)
- Follow the instructions as specified in the Lubrication Kit.
- Lubricate your treadmill approximately every 6 months of normal use

Belt Adjustment

Proper belt adjustment is important for smooth and safe operation of the treadmill. If the belt is too loose, you will feel a slight hesitation each time you take a step. (If this symptom occurs, first turn the treadmill off and try lubricating the deck/belt — see Belt/Deck Maintenance.)

The adjustment screws must be tightened evenly in order to adjust the belt properly. The adjustment screws are located at the rear of the treadmill in the end caps.

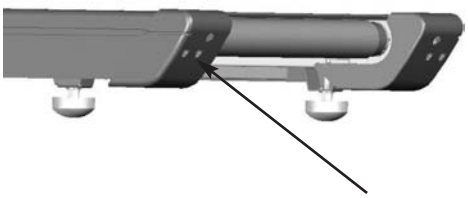

1/4 Turn each time on both sides

Both adjustment screws should be tightened 1/4 turn in a clockwise direction with a wrench and the belt checked for slipping after each adjustment. If the belt continues to slip, repeat this process until the belt stops slipping. Make sure to only turn the adjustment screws 1/4 turn each time until the slipping stops. This will insure that you do not over-tighten the rollers. Over-tighten the rollers may cause serious damage to the treadmill.

If the belt tracks too close to one side, loosen the adjustment screw on the opposite side, turning it counterclockwise 1/4 turn. Restart the treadmill and run it at 5 mph / 8 kph for 1 to 2 minutes to insure the belt will stay in the center. Repeat the procedure if necessary.

If noises develop or malfunctions occur, contact your authorized Diamondback fitness dealer.

Diamondback fitness

Important! • Important! • Important! • Important! • Important! • Important!

Warranty card must be completed and returned to Diamondback within 15 days of purchase. Failure to comply may void manufacturer's Warranty. Or, you may register your product at www.diamondbackfitness.com.

Your Name: _____

Address: _____

City: _____ State: _____ Zip: _____

Daytime phone No.: _____ Evening phone No.: _____

Dealer Store Name: _____ Address: _____

City: _____ State: _____ Zip: _____

Model: _____ Serial No.: _____

Purchase Date: _____

Environment Unit Placed:

❏ Home ❏ Light Institutional, i.e. Hotel, Business Center…

Mail completed form to:

Diamondback Fitness - Warranty Card

300 Camarillo Ranch Road

Camarillo, CA 93012

Please refer to www.diamondbackfitness.com for instructions in French.
Svp référez-vous www.diamondbackfitness.com pour instructions en français.

www.diamondbackfitness.com

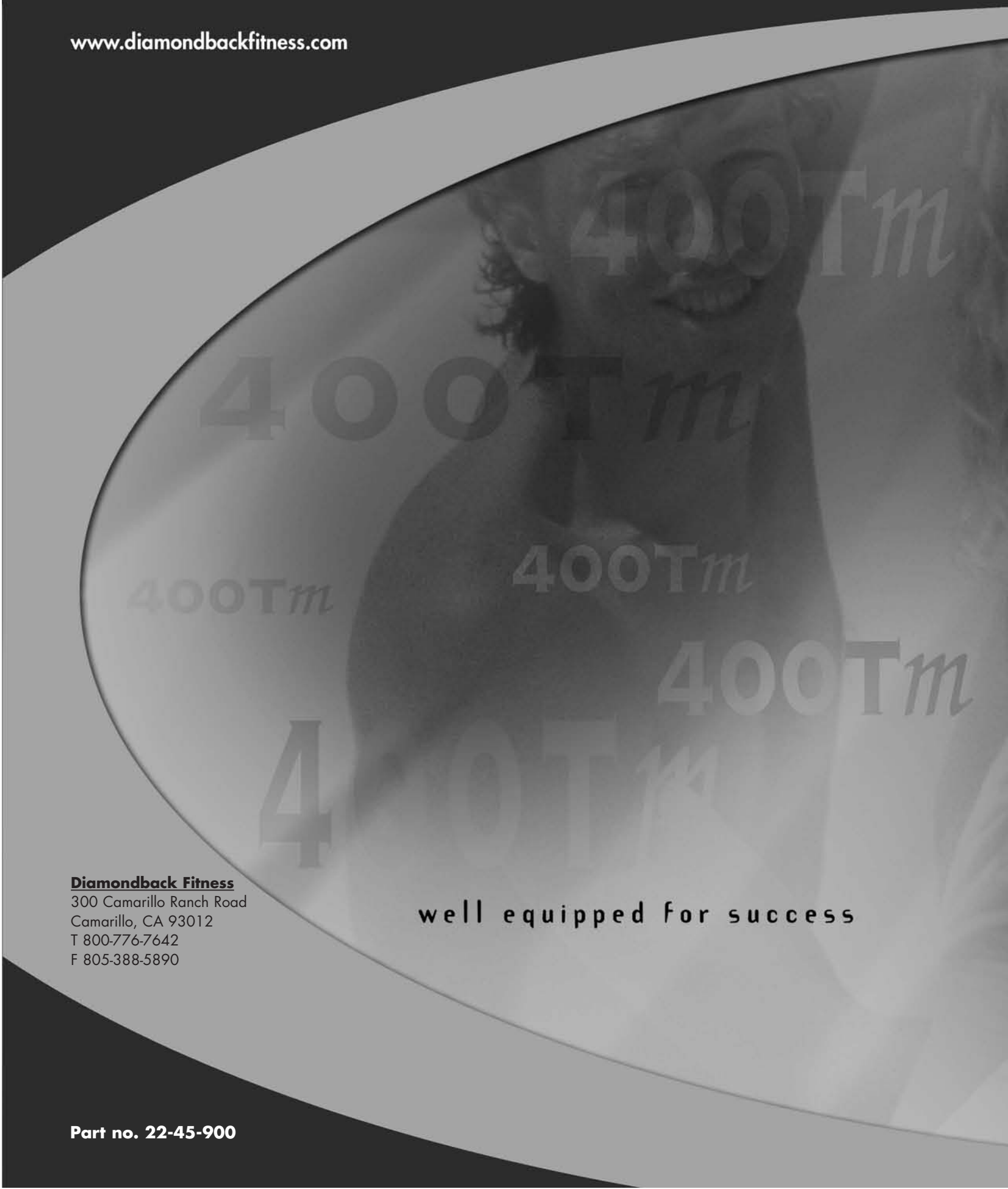

Diamondback Fitness
300 Camarillo Ranch Road
Camarillo, CA 93012
T 800-776-7642
F 805-388-5890

well equipped for success

Part no. 22-45-900